Bend-Sofa

SOFAS

2010

Patricia Urquiola



Description

Bend-Sofa is a modular sofa with a great personality. It seems to have been moulded by an artist's hand, but actually originates from the study of 3D models and digital research. Its irregular shape enhances comfort. The very name Bend-Sofa effectively expresses the idea of movement obtained by the alternation of solids and voids, underlined by the contrasting stitching that gives rise to a further design on its irregular and sinuous surface. The corrugated modules, assembled starting from seat, ottoman and corner elements, develop a large number of configurations, from linear versions in compact dimensions to large compositions, as well as original and alternative solutions that stand outside traditional canons.

Technical information

Internal frame
tubular steel and steel profiles
Internal frame upholstery
flexible cold shaped polyurethane foam, polyester fibre cover
Back cushion (B40C-B55C)
down feather and polyurethane insert, box style typology, zig zag stitching
Support (BS-BSB)
visco-elastic polyurethane, polyester and cotton fibre cover
Feet
thermoplastic material
Cover
fabric or leather (zig zag stitching)

Technical drawings

B164C

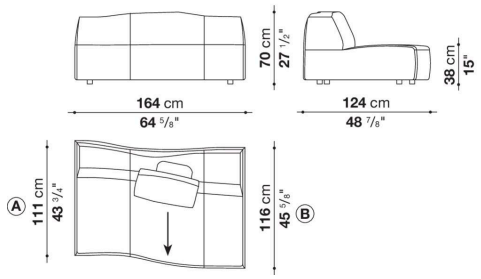

B214C

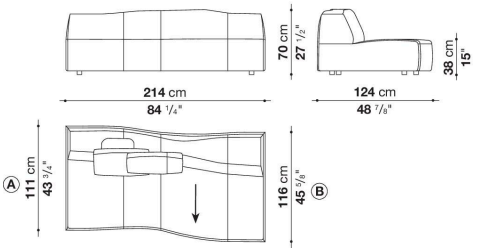

B214CS

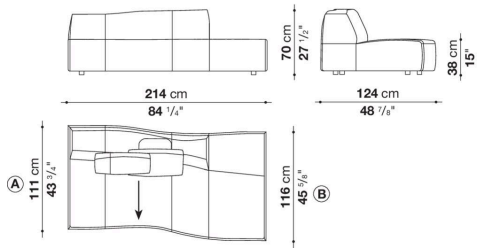

B214CD

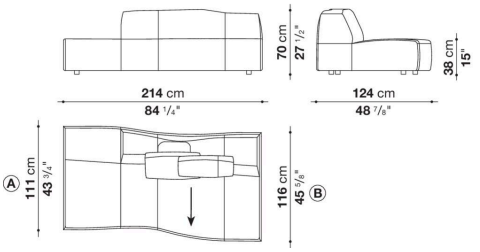

B214TS

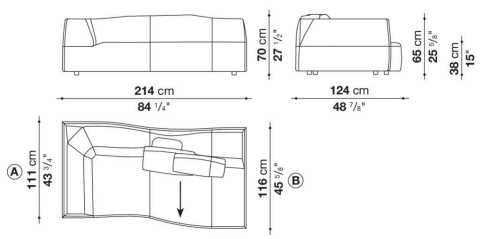

B214TD

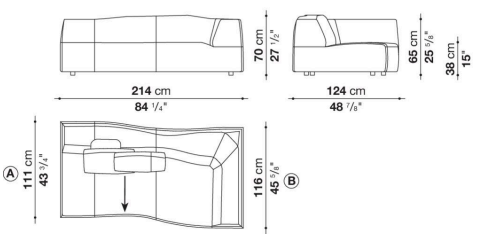

B111A

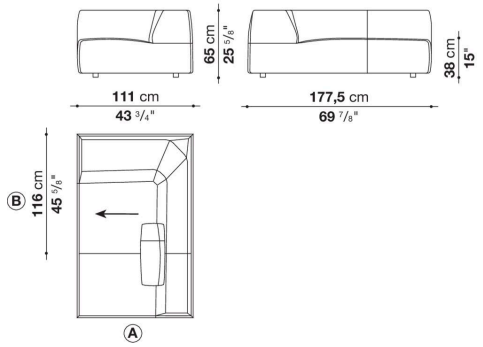

B116A

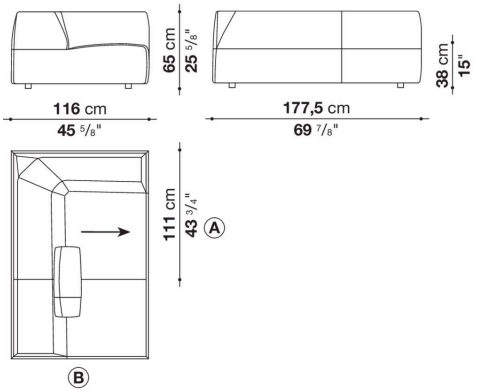

B177LS

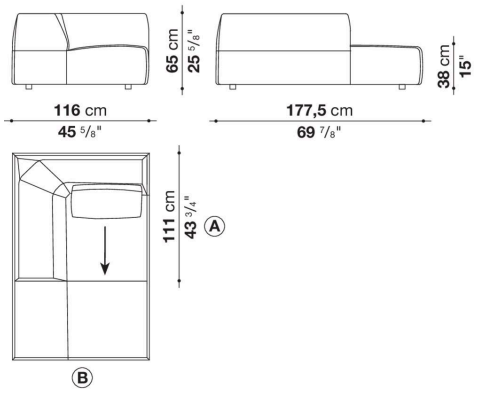

B177LD

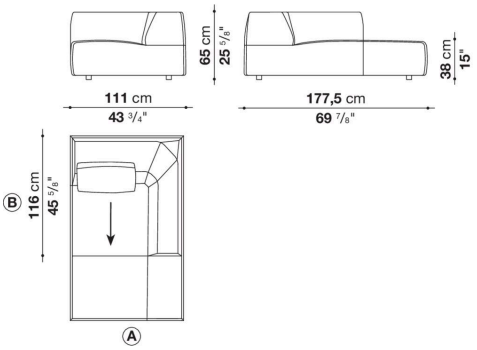

B111P

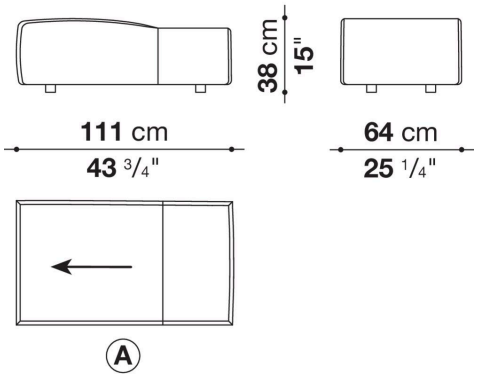

B116P

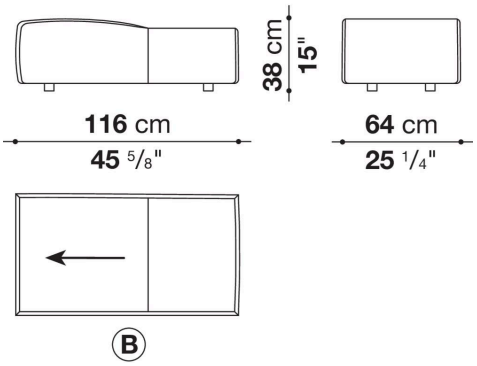

B1P

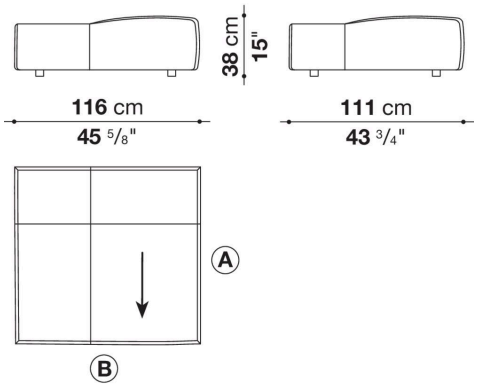

B2P

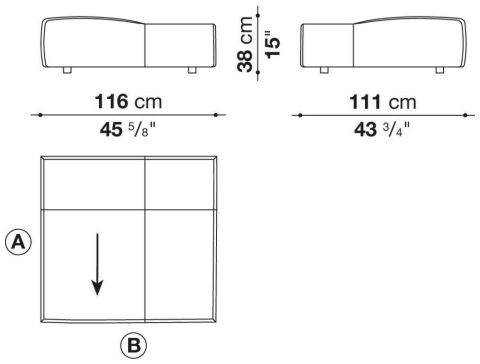

B3P

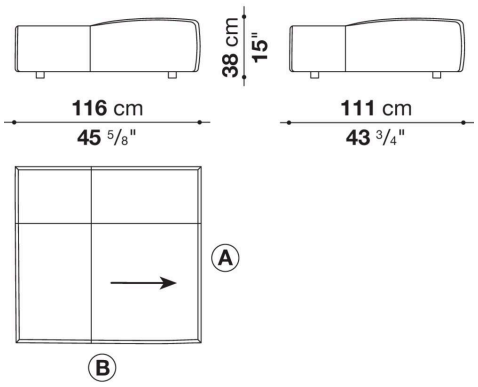

B4P

